Dimensions for microbore cylinders ISO 6432

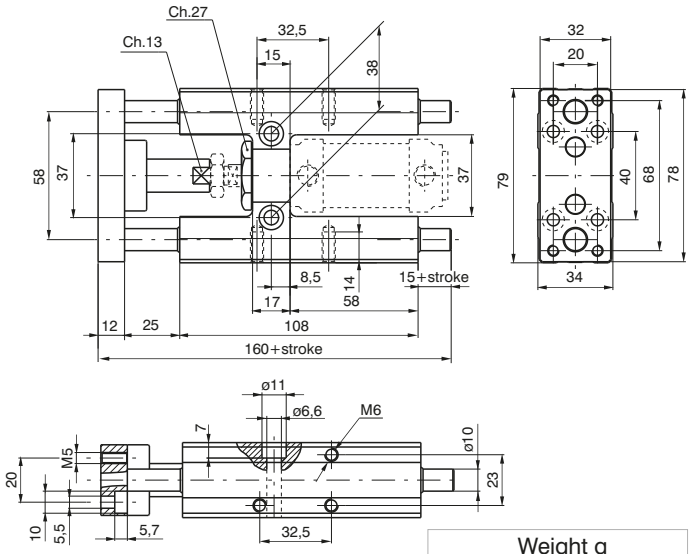

Ordering code
1260.Ø.stroke.GLB (Microbore cylinders ISO 6432 must be ordered separately)

Weight g	
stroke 100	every 50 mm
970	60

Standard strokes
ø 20 100 - 150 - 200 mm
ø 25 100 - 150 - 200 - 250 mm

Sensors and sensor clamps: Use standard sensors and clamps.

Dimensions for microbore cylinders ISO 15552

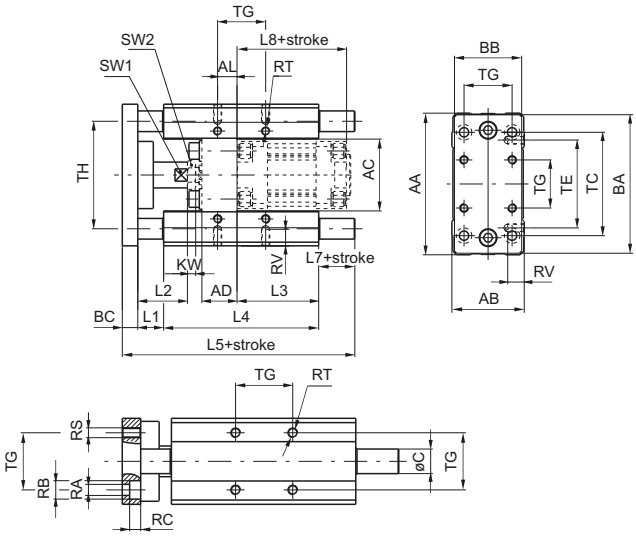

Ordering code
1320.Ø.stroke.GLB (Cylinders must be ordered separately)

	Bore	Ø32	Ø40	Ø50	Ø63	Ø80
Weight g	stroke 100	1720	2900	4700	6000	11300
	every 50 mm	91	159	159	250	380

Bore	AA	AB	AC	AD	AL	BA	BB	BC	C	KW	L1	L2	L3	L4	L5
32	97	49	50	24	4.3	93	45	12	12	6	25	39	76	125	187
40	115	58	57.5	28	11	112	55	12	16	7	25	44	81	140	207
50	137	70	69.5	34	18.8	134	65	15	20	8	25	48	79	150	225
63	152	85	84.5	34	15.3	149	80	15	20	8	25	48	111	182	242
80	189	105	106	34	21	180	100	20	25	9	25	53	128	215	302

Bore	L7	L8	RA	RB	RC	RS	RT	RV	SW1	SW2	TC	TE	TG	TH
32	25	94	6.6	11	6.5	M6	M6	12	15	17	78	61	32.5	74
40	30	105	6.6	11	6.5	M6	M6	14	15	19	84	69	38	87
50	35	106	9	15	9	M8	M8	16	22	24	100	85	46.5	104
63	20	121	9	15	9	M8	M8	16	22	24	105	100	56.5	119
80	42	128	11	18	11	M10	M10	20	27	24	130	130	72	148

Standard strokes
Ø 32 100 - 150 - 200 - 250 - 300 mm
Ø 40 100 - 150 - 200 - 250 - 300 - 350 mm
Ø 50 100 - 150 - 200 - 250 - 300 - 350 - 400 - 450 mm
Ø 63 100 - 150 - 200 - 250 - 300 - 350 - 400 - 450 - 500 mm
Ø 80 100 - 150 - 200 - 250 - 300 - 350 - 400 - 450 - 500 - 550 mm

Sensor clamps and brackets for 1319-1320 series
Use standard sensors and brackets on the rear and following special brackets on front of cylinders for use sensors codes 1500._, RS._, HS._ which have the following ordering codes:

1320.AGL sensor bracket for cylinders Ø32 and Ø40
1320.BGL sensor bracket for cylinders Ø50 and Ø63
1320.CGL sensor bracket for cylinders Ø80

Overall dimensions and technical information are provided solely for informative purposes and may be modified without notice